PUMP #4 12-07 RSP

PM 1626-10

Parker Hydraulics

Service Parts Guide

Effective: February, 1997

PVP SERIES VARIABLE VOLUME PISTON PUMP

Model PVP60 * * * * 10

Model PVP76 * * * * 10

REAR PORTED PUMP

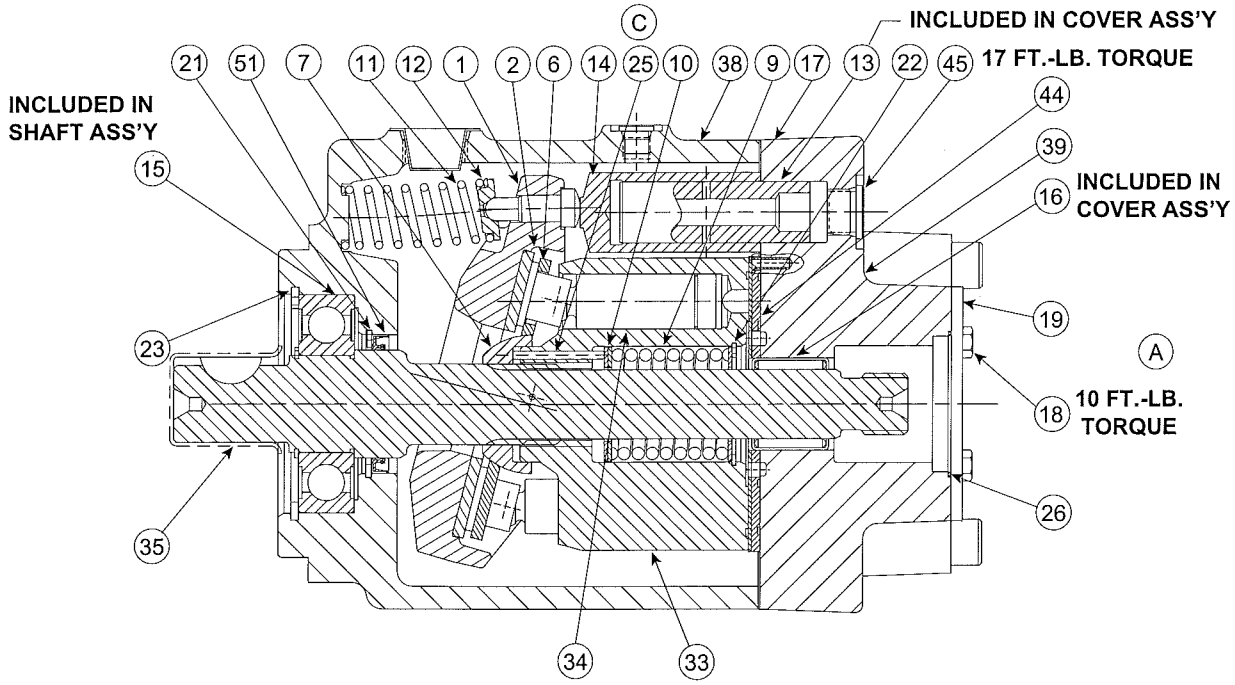

PVP76

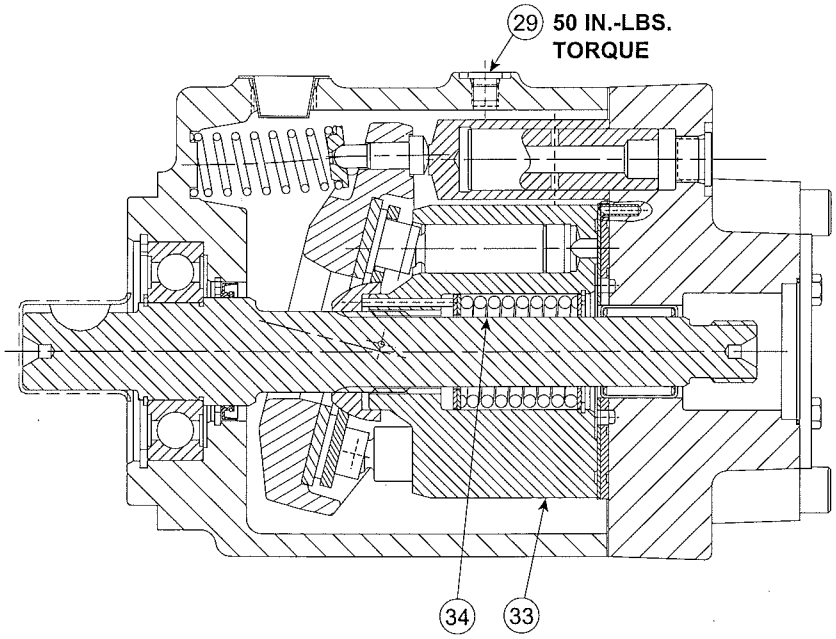

PVP60

Note:

1. Installed ht of item 13 (servo post) above item 39 (rear cover) to be 2.305/2.295 in.
2. Installed ht of item 16 (needle brg) above item 39 (rear cover) to be .130/.150 in.
3. Install item 4 (bushing) .025 to .035 inches below housing trunnion boss.
4. Pumps shown are right hand (cw) rotation. Left hand rotation pumps have pressure, suction & cover drain port reversed. Compensator is also on opposite side.

SIDE PORTED PUMP

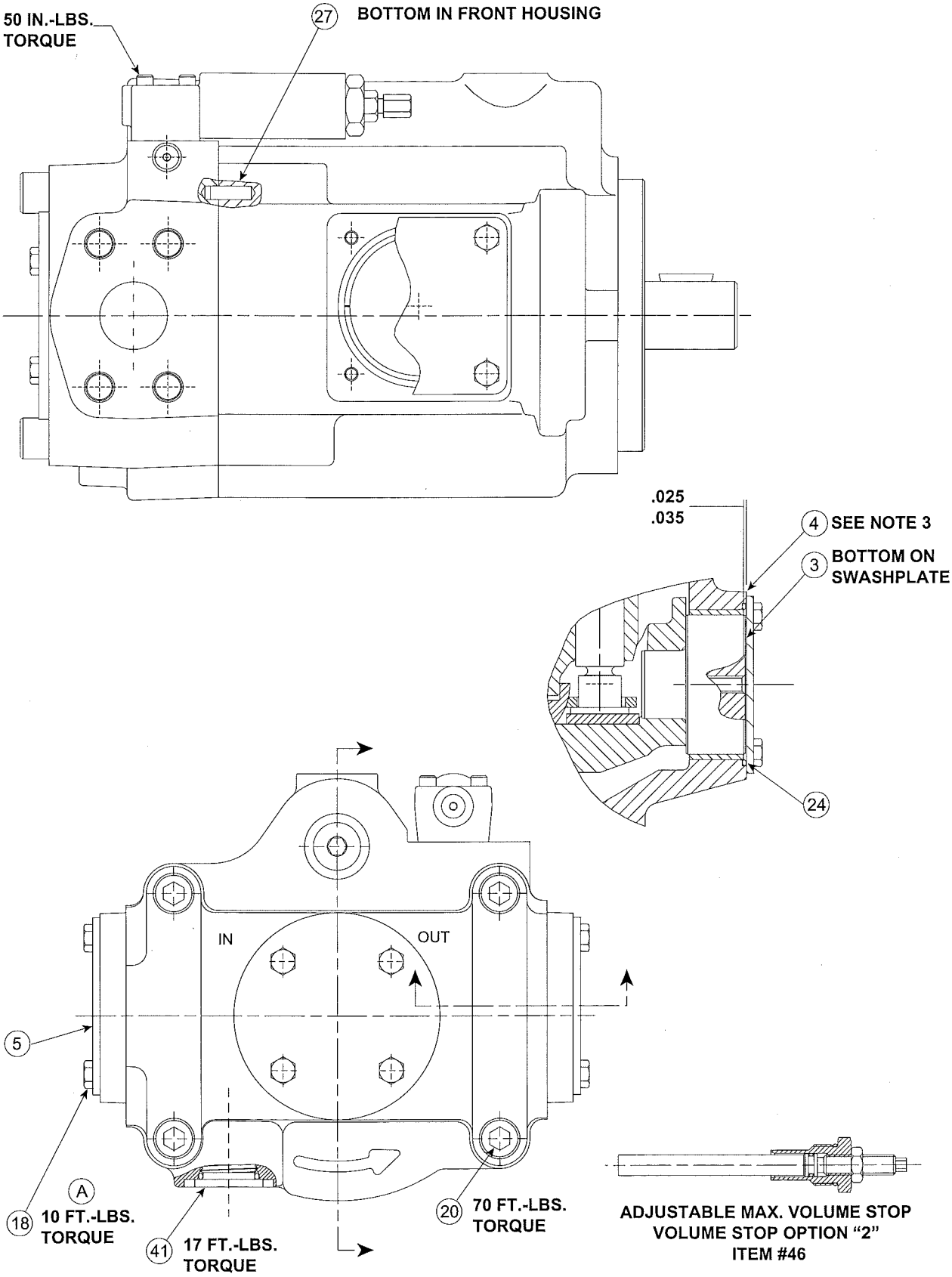

CONTROL OPTIONS

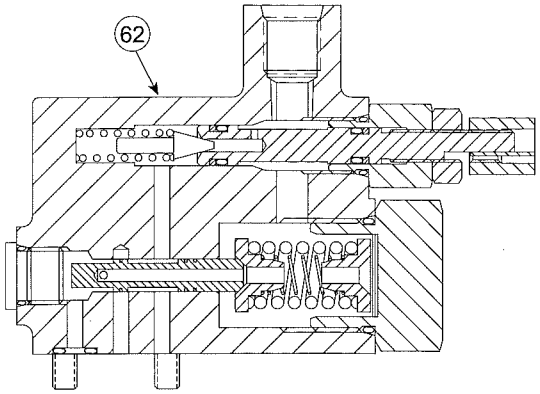

REMOTE CONTROL OPTION "M"
INTERNAL PRESSURE SENSE

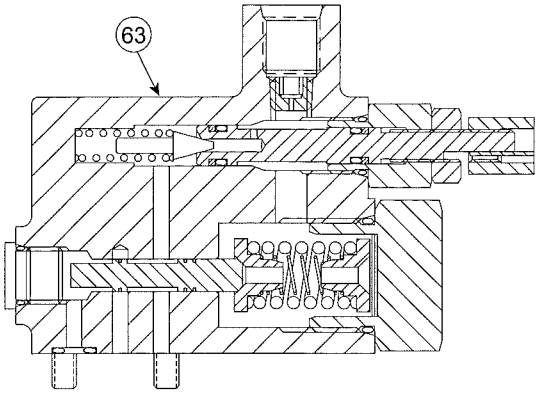

REMOTE CONTROL OPTION "ME"
EXTERNAL PRESSURE SENSE

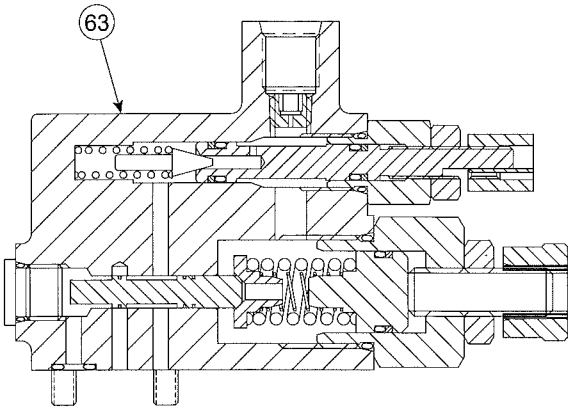

LOAD SENSE CONTROL OPTION "A"

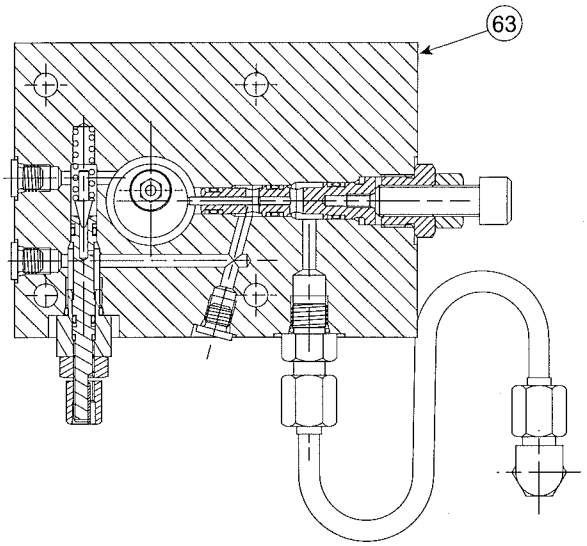

HI-LO TORQUE CONTROL BLOCK
CONTROL OPTIONS "HLM"
AND "HLA" (SEE NOTE 1).

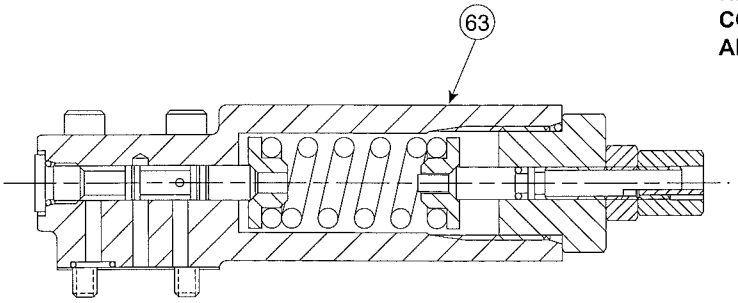

STANDARD CONTROL OPTION "OMIT"

Note:

1. For proper operation of Hi-Lo horsepower control (control options HLM and HLA) it must be used with corresponding compensator. "M" control for "HLM" and "A" control for "HLA".

THRU SHAFT OPTIONS

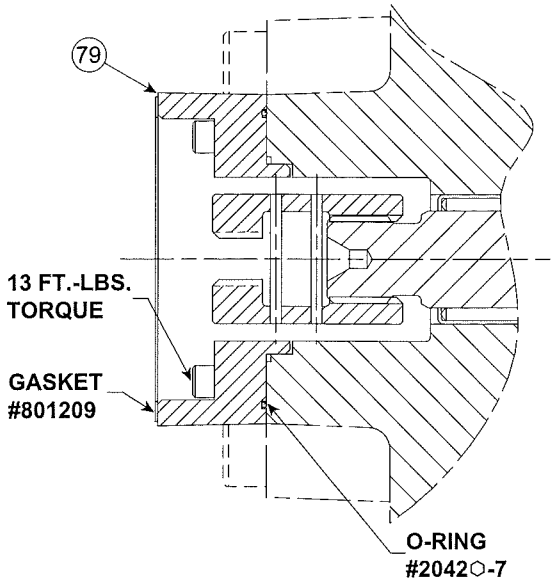

THRU SHAFT VARIATIONS "6A4" AND "9A4"
REAR PUMP CONFIGURATION:

- SAE A 2 BOLT
- 3.25 PILOT DIAMETER
- 9 TOOTH 16/32 PITCH SPLINE COUPLER

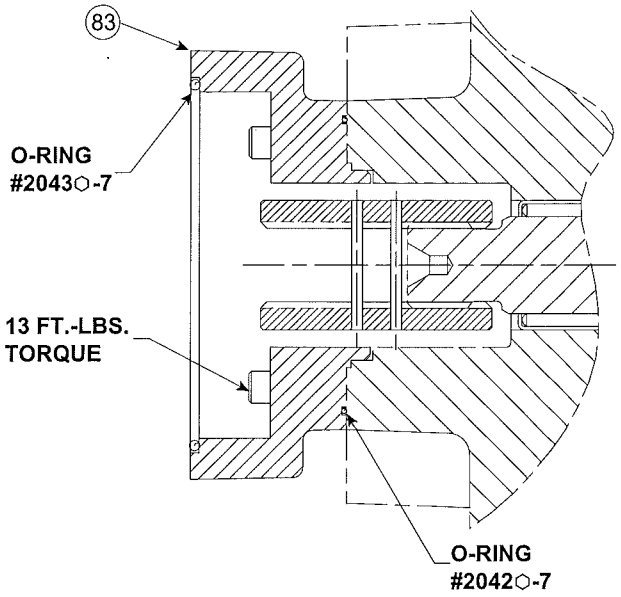

THRU SHAFT VARIATIONS "6B4" AND "9B4"
REAR PUMP CONFIGURATION:

- SAE B 2 BOLT
- 4.00 PILOT DIAMETER
- 15 TOOTH 16/32 PITCH SPLINE COUPLER

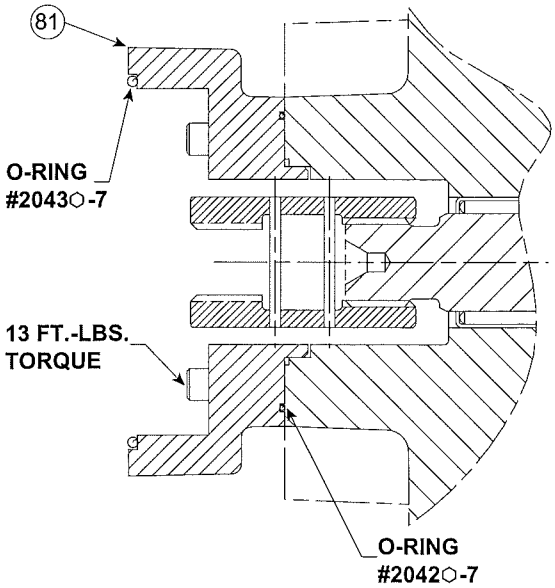

THRU SHAFT VARIATIONS "6B3" AND "9B3"
REAR PUMP CONFIGURATION:

- SAE B 2 BOLT
- 4.00 PILOT DIAMETER
- 13 TOOTH 16/32 PITCH SPLINE COUPLER

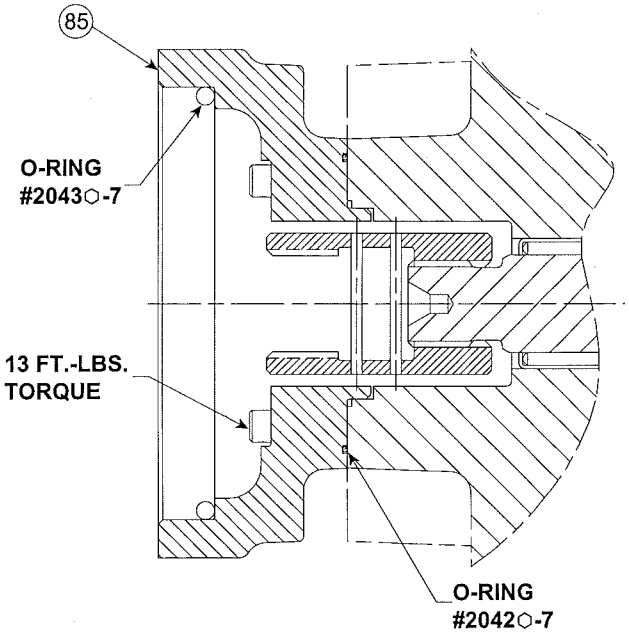

THRU SHAFT VARIATIONS "6C3" AND "9C3"
REAR PUMP CONFIGURATION:

- SAE C 2 BOLT
- 5.00 PILOT DIAMETER
- 14 TOOTH 12/24 PITCH SPLINE COUPLER

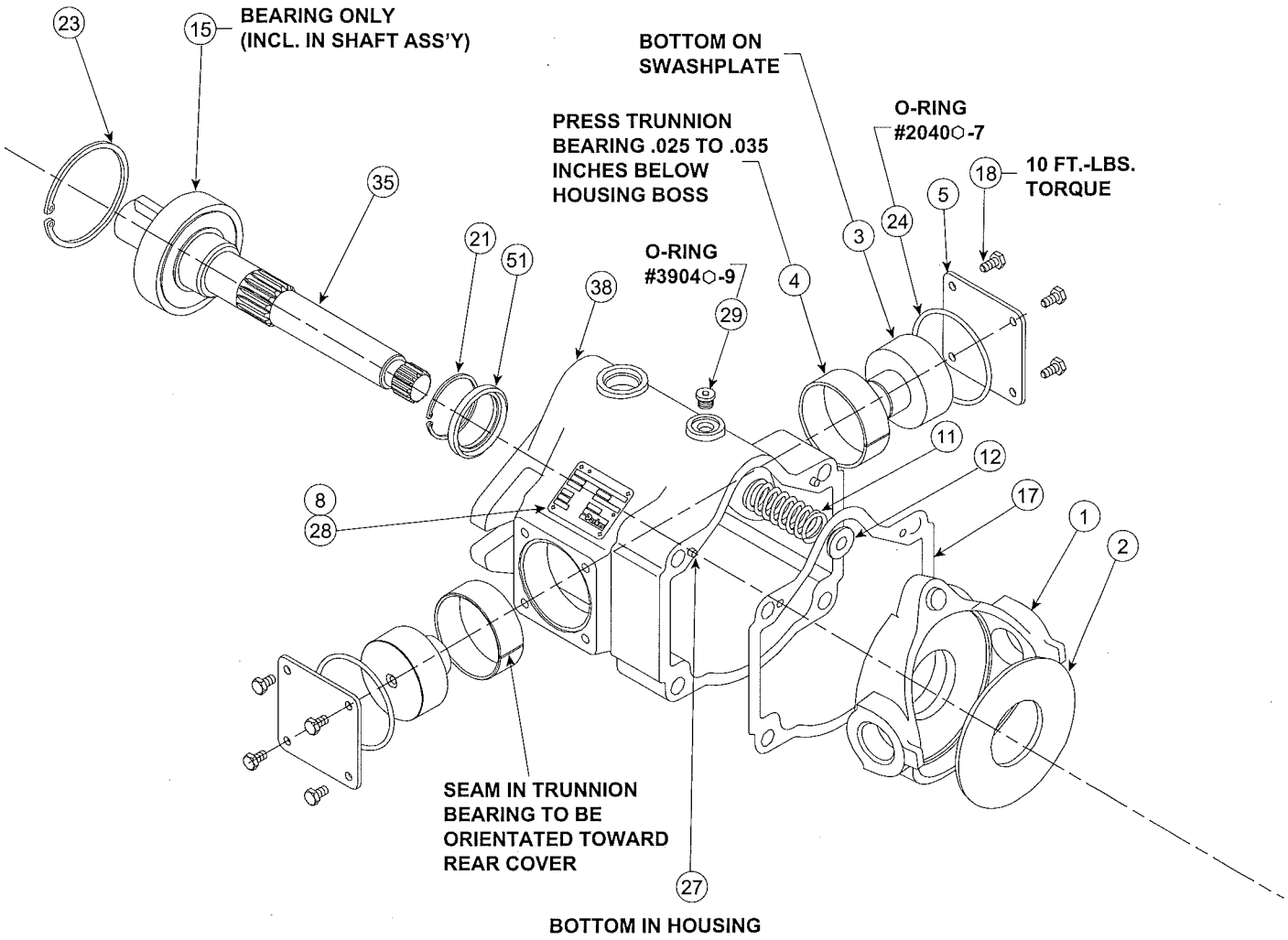

Note: Pump shown is right hand (CW) rotation.
For a left hand (CCW) rotation pump, the port plate and port orientation will be reversed.

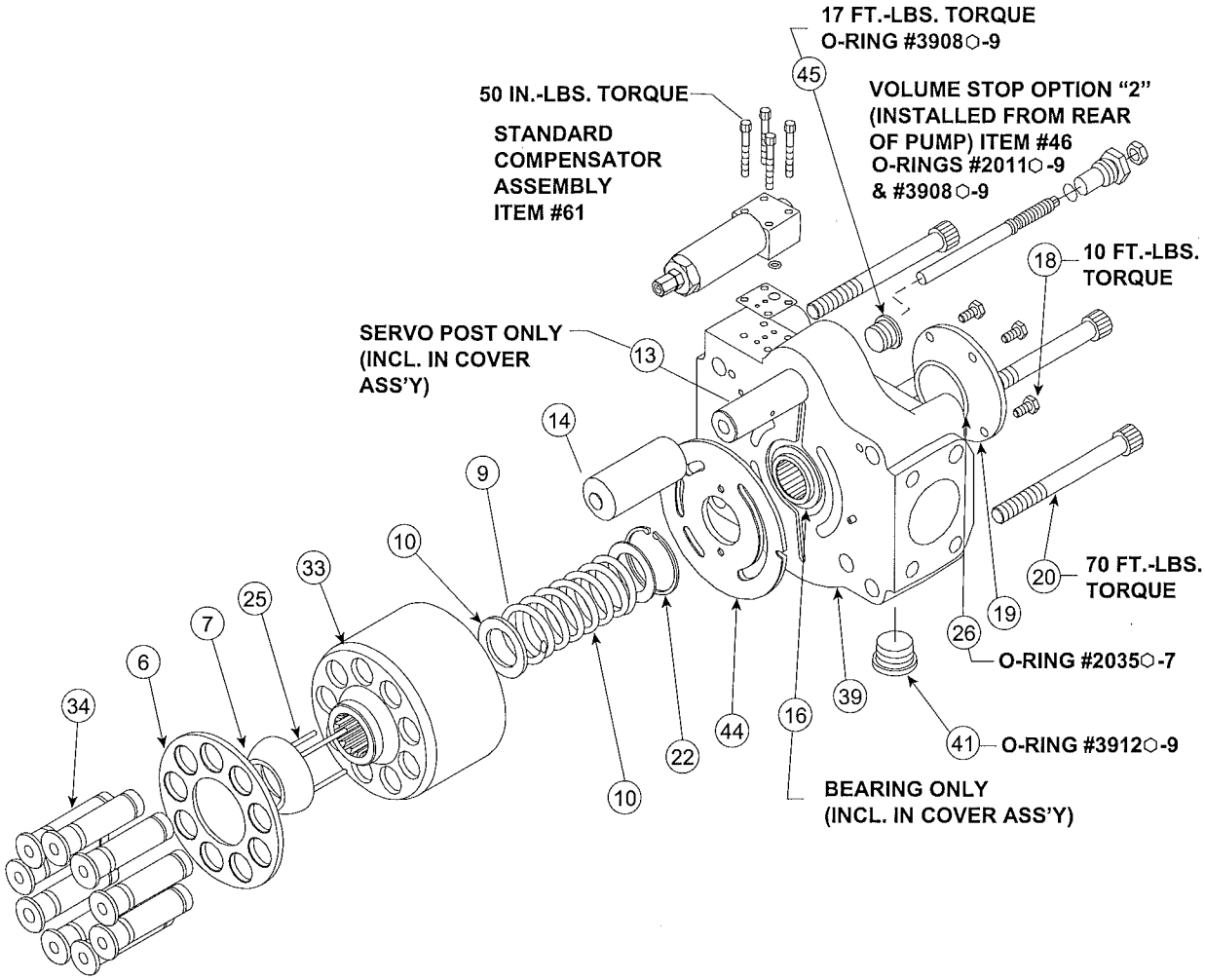

Service Notes:

- Use a clean lubricant (compatible with the working fluid) on all pump components during assembly.
- Thoroughly clean the reservoir, suction lines, suction strainer, drain lines, etc. before reinstalling the pump. Most premature pump failures occur when contaminants from a previous failure have not been completely removed from the system, or cause for previous failure is still present (i.e. water in oil, bypassing filter, etc.).
- Always fill the case with clean fluid before starting a new or serviced pump (fill as high as inlet port will allow on a PAVC style pump). For flooded suction, purge air from suction lines by cracking the inlet fitting or vent plug on pump body. This should prevent an airlock condition and allow for faster priming.
- Check for proper shaft rotation if there is a possibility it may have changed during a system rebuild.
- Start pump with an open circuit whenever possible. Reduce the compensator to its minimum setting during start-up. Cycle the pump on and off stroke while increasing the compensator to its required setting, this will assist in break-in of new components and help purge air from the case.

	ITEM	PART NUMBER	QTY	DESCRIPTION
	1	788102	1	SWASHPLATE ASS'Y
	2	788103	1	SLIPPER PLATE
P	3	788115	2	TRUNNION PIN
	4	788137	2	TRUNNION BUSHING
	5	788134	2	TRUNNION COVER
	6	788113	1	SLIPPER RETAINER
	7	788114	1	BALL SEAT
	8	800511	1	NAMEPLATE
	9	788135	1	BARREL SPRING
	10	788136	3	BARRELL SPRING WASHER
	11	787780	1	SWASH PLATE SPRING
	12	787769	1	SWASH SPRING GUIDE
	13	788120	1	SERVO POST
V	14	788121	1	SERVO PISTON
	15	788138	1	BALL BEARING
	16	788139	1	NEEDLE BEARING
	17	788133	1	HOUSING GASKET
	18	12X221	8	HEX BOLT
	19	787232	1	COVER PLATE
	20	10X303	4	CAP SCREW
	21	56X329	1	RETAINING RING (SEAL)
	22	56X324	1	RETAINING RING (BARL)
	23	56X362	1	RETAINING RING (BRG OD)
P	25	23X72	3	BARREL PIN
	27	99X127	2	ROLL PIN (HOUSINGS)
	28	39X10	2	DRIVE SCREW

R	44	788123	1	PORT PLATE - CW
L	44	788124	1	PORT PLATE - CCW

2	R	39	788235 ⬡	1	CVR ASS'Y-SIDE FLNG-RH
	L	39	788236 ⬡	1	CVR ASS'Y-SIDE FLNG-LH
8	R	39	788518 ⬡	1	CVR ASS'Y-SIDE 6149-RH
	L	39	788519 ⬡	1	CVR ASS'Y-SIDE 6149-LH
9	R	39	788237 ⬡	1	CVR ASS'Y-SIDE METRIC-RH
	L	39	788238 ⬡	1	CVR ASS'Y-SIDE METRIC-LH

OMIT	2	38	788105	1	HOUSING ASS'Y - SAE	
		41	788207-12⬡	1	SHIPPING PLUG	
B	8	38	788513	1	HOUSING ASS'Y - 6149	④
C		41	120X28	1	CAPLUG	
D	9	38	788188	1	HOUSING ASS'Y - MIX	④
		41	120X28	1	CAPLUG	
K	9	38	788189	1	HOUSING ASS'Y - METRIC	④
		41	120X28	1	CAPLUG	

OMIT	35	788230	1	SHAFT ASS'Y-"C" STR	
B	35	788231	1	SHAFT ASS'Y-"C" SPL	
C	35	788232	1	SHAFT ASS'Y-"CC" STR	
D	35	788233	1	SHAFT ASS'Y-"CC" SPL	
K	35	788234	1	SHAFT ASS'Y-"K" KEYED	④

	ITEM	PART NUMBER	QTY	DESCRIPTION
60	33	788112	1	BARREL
	34	788090	9	PISTONS
76	33	788111	1	BARREL
	34	788089	9	PISTONS

10	1000 PSI COMP. SET	
20	2000 PSI COMP. SET	
30	3000 PSI COMP. SET	
36	3600 PSI COMP. SET	
45	4500 PSI COMP. SET	PVP60 ONLY
50	5000 PSI COMP. SET	PVP60 ONLY

10

PUMP DESIGN SERIES

		ITEM	PART NUMBER	QTY	DESCRIPTION
OMIT		78			NO THRU SHAFT
6	A4	79	788147 ⬡	1	"A" PILOT, 9T SPLINE
	B3	81	788148 ⬡	1	"B" PILOT, 13T SPLINE
	B4	83	788149 ⬡	1	"B" PILOT, 15T SPLINE
	C3	85	788150 ⬡	1	"C" PILOT, 14T SPLINE
9	A4	79	788203 ⬡	1	"A" PILOT, 9T SPLINE
	B3	81	788202 ⬡	1	"B" PILOT, 13T SPLINE
	B4	83	788201 ⬡	1	"B" PILOT, 15T SPLINE
	C3	85	788200 ⬡	1	"C" PILOT, 14T SPLINE

④

OMIT	PUMP NOT PAINTED
P	PUMP PAINTED

OMIT	51	787549	1	SHAFT SEAL - BUNA
	24	2149N-7	1	O-RING
	26	2035N-7	1	O-RING
	29	108X6	1	PLUG
V	51	788043	1	SHAFT SEAL - VITON
	24	2149V-7	1	O-RING
	26	2035V-7	1	O-RING
	29	108X6V	1	PLUG

OMIT	45	108X8 ⬡	1	PLUG (VOLUME STOP)
2	46	788239	1	VOLUME STOP KIT ⬡

OMIT	61	788240⬡- *	1	STANDARD COMP ASS'Y	
M	62	788241⬡- *	1	REMOTE COMP ASS'Y (INT)	
ME	63	788242⬡- *	1	REMOTE COMP ASS'Y (EXT)	
A	64	788243⬡- *	1	LOAD SENSE COMP ASS'Y	
HLM	65	788489⬡- *	1	HI-LO TORQUE ASS'Y	⑤
HLA	65	788489⬡- *	1	HI-LO TORQUE ASS'Y	⑤

NOTES:

1. ⬡ O-RING COMPOUND DESIGNATION - ⬡(OMIT) =NITRILE, Ⓥ =VITON
2. SEAL KIT P/N SKPVP □ ⬡ ** (** - DESIGN SERIES)
   - 60 (60 CC/REV)
   - 76 (76 CC/REV)
3. ROTATING GROUP KIT RRKPVP □ □ ** (** - DESIGN SERIES)
   - R (CW)
   - L (CCW)
   - 60 (60 CC/REV)
   - 76 (76 CC/REV)
4. DO NOT CATALOG - FOR INTERNAL REFERENCE ONLY.
5. FOR PROPER OPERATION OF HI-LO TORQUE CONTROL, IT MUST BE USED WITH THE CORRECT COMPENSATOR ASSEMBLY. "HLM" CONTROL MUST BE USED WITH "M" (REMOTE) CONTROL ASSEMBLY. "HLA" CONTROL MUST BE USED WITH "A" (LOAD SENSE) CONTROL ASSEMBLY.